Note 1: Running Bypass as bypass (when not acting as nursery delivery) In order to fully purge, Bypass electric ball valve is engaged, K pumps, which are located in final three manifold positions have to each run to the energized bypass solenoid which empties directly to the return line.

Question: How do we purge water from the delivery array after bypass has run? This must be done to ensure nutrient concentration isn't diluted at delivery.

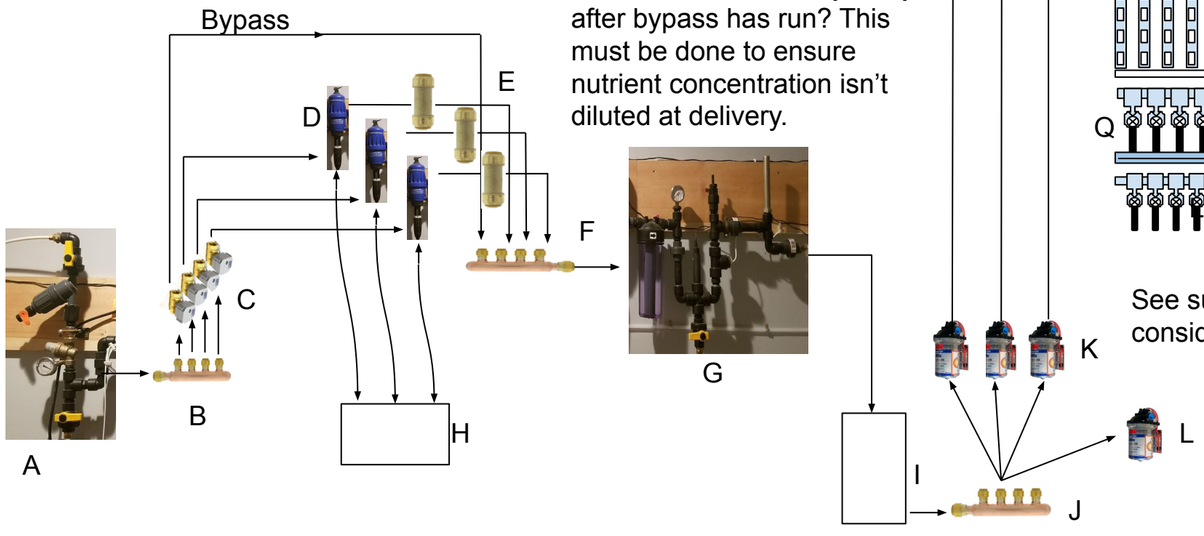

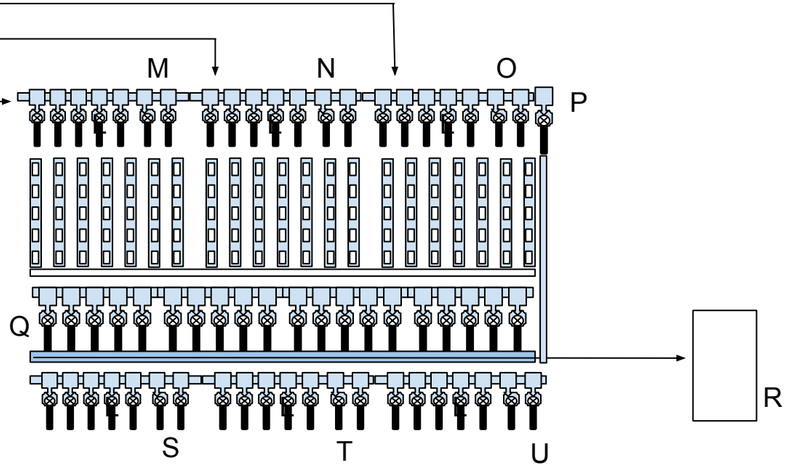

See supplemental material for implementation to address plumbing considerations discussed in Note 2

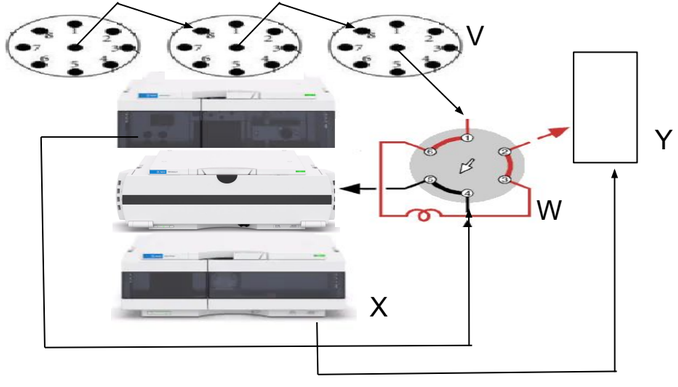

Note 2: For testing each vertical needs its own collection reservoir, with a bottom set union, with a line to the appropriate valve port, and a peristaltic pump between the output of the last daisy-chained 8 port valve and the injection port on the injection valve. There should be a filter between the peristaltic pump and the injection valve.

A. Filter
B. Doser Input Manifold
C. Yolink Ball valves
D. Dosatron Dosers
E. Doser Output Manifold
F. ¾" SharkBite Check Valve
G. Dosatron Mixing Kit with Water Hammer protection
H. Concentrated Broth Reservoir
I. Delivery Reservoir
J. Delivery Manifold
K. Delivery Pumps to Drip Hydro Sections A, B, and C
L. Pump to Nursery, fed by bypass
M. Delivery Solenoid Array to Section A
N. Delivery Solenoid Array to Section B
O. Delivery Solenoid Array to Section C
P. Bypass solenoid and line direct to return
Q. Return Solenoid Array
R. Return Reservoir
S. Return Solenoid Array to Section A
T. Return Solenoid Array to Section B
U. Return Solenoid Array to Section C
V. Testing Plumbing
   a. Section A: 8 position Stream selection valve Valco EUTB-VLSD8MWE2
   b. Section B: 8 position Stream selection valve Valco EUTB-VLSD8MWE2
   c. Section C: 8 position Stream selection valve Valco EUTB-VLSD8MWE2
W. Injection Valve - located in Column compartment
X. HPLC System
   a. 1260 Infinity Quaternary Pump
   b. 1260 Infinity MultiColumn Thermostat
   c. 1260 Infinity Variable Wavelength Detector
Y. Testing Waste Reservoir